EBARA

ISO 9001 : 2000
Lic no: QEC22090
Quality Endorsed Company

FSS 8001-R1

EBARA STAINLESS STEEL VOLUTE PUMP

Model FSSA

50 HZ

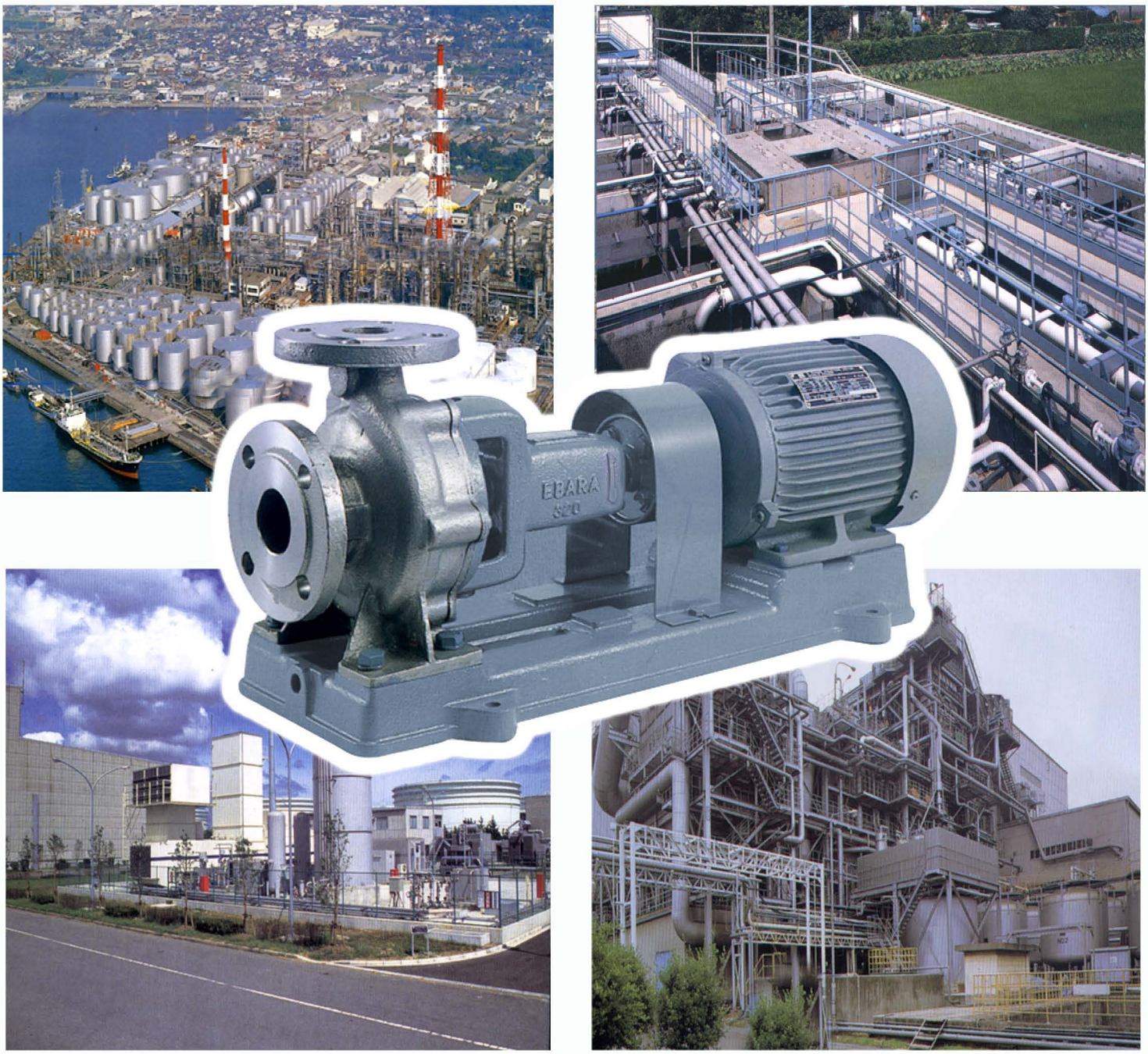

Ebara Stainless Stell Volute Pump

■ Feature

1. Pump portion contacting liquid is made of high grade stainless steel.
2. BPO (Back Pull Out) system allows all rotating elements to be removed without disconecting suction and discharge pipework.
3. Top centerline discharge, foot support under casing for maximum resistance to misaligment and and distorsion from pipe loads.
4. Non-overload design to ensure stable performance for all applications.
5. Compact construction, aplicable for two-poles high speed motor provides a compact unit and minimizes installation area.
6. Wide range application due to 316 stainless steel material.

■ APPLICATIONS

1. Industrial use
2. Chemical Solusions
3. Industrial drainage
4. Hot and cold water supply
5. Sea water

■ MODEL CODE

40 X 32 FSSG 5 2.2

- 2.2 — Output in kW : 2.2 kW
- 5 — Frequency 50 Hz:5
- FSSG — Model
- 32 — Discharge size in mm
- 40 — Suction size in mm

■ SPECIFICATION

		Standard		Optional	
		2 pole model	4 pole model	2 pole model	4 pole model
Liquid	Name	Water, oil, liquid chemicals. Rifer to table 1		For specifications other than at left, please contact Ebara	
	Temperature	0 to 100 °C (32 to 212 °F)			
	Viscosity	below 10 cSt			
	Specific gravity	0.7 to 1.0			
Re. NPSH		4m... Expect for Models 100x80 (2 pole) 7m... Model 100x80 (2 pole)		-	
Instalation		Indoors		Outdoors	
Construction	Impeller	Enclosed			
	Shaft seal	Packing		Mechanical seal (0 - 90 °C)	
	Sealing	Self		-	
	Bearing	Sealed ball bearing		-	
	Shaft sleeve	No		-	
	Casing Ring	No		-	
Flange		JIS 10 kg/cm^2 R.F.		-	
Material	Casing	SCS-14 Stainless steel		-	
	Impeller	SCS-14 Stainless steel		-	
	Shaft	316 Stainless steel		-	
	Casing Ring	-		-	
	Casing O-ring	Fluororubber (viton)		Teflon (PTFE)	
	Seal	Teflon (PTFE)		Mech. Seal:SiC/SiC	
Accessories	Bare shaft	-		-	
	With motor	Common base, Coupling, Coupling guard		-	

■ PERFORMANCE

(Specific grafity : 1.0)

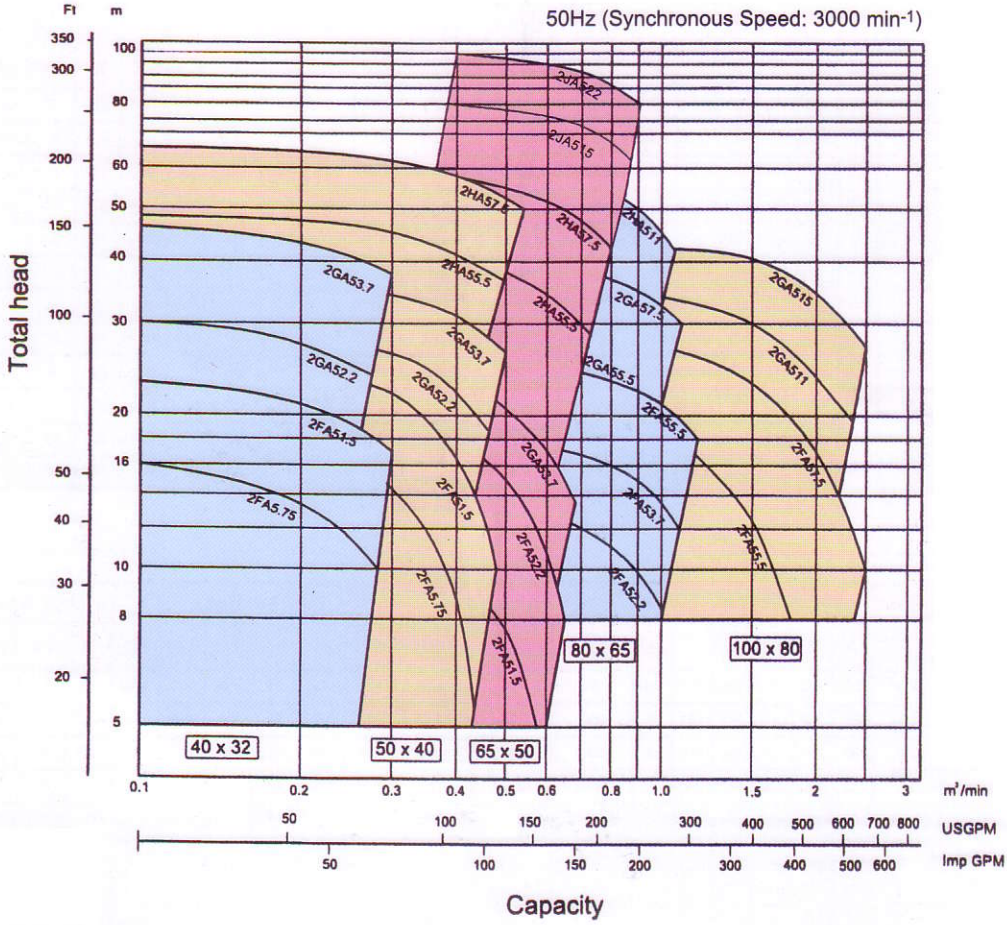

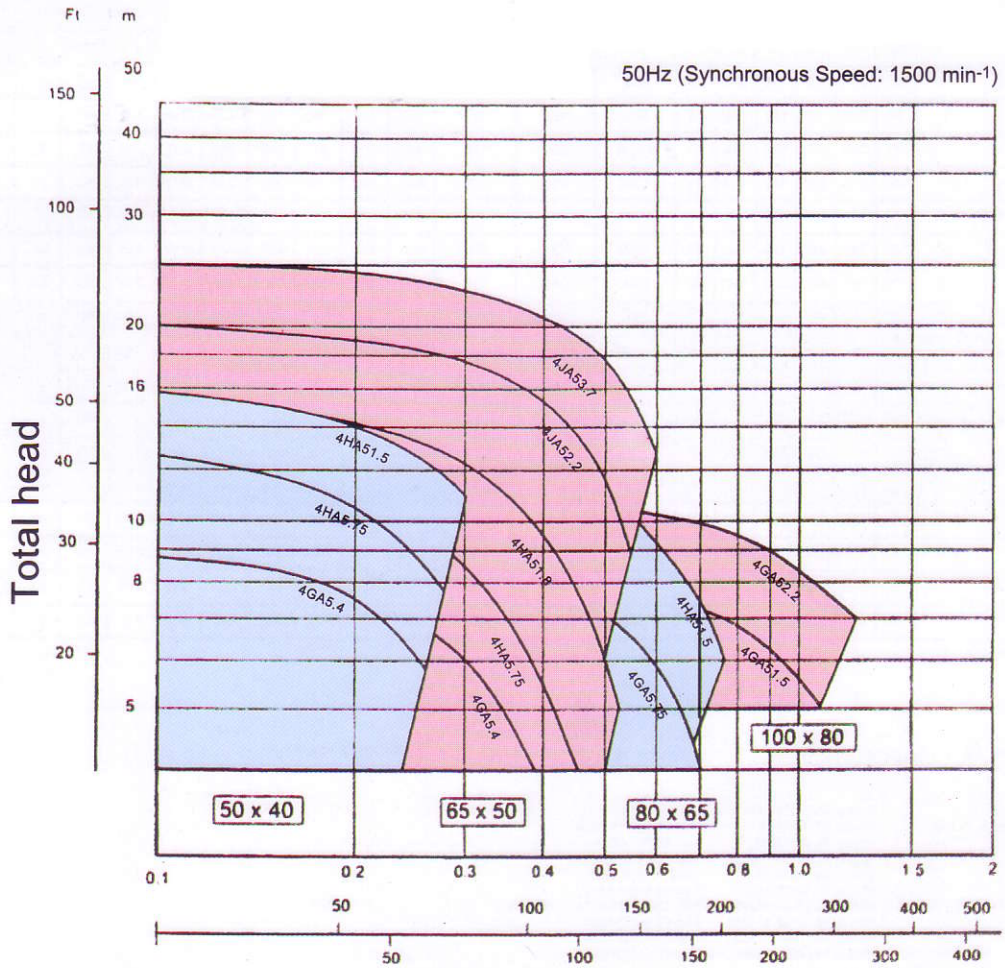

■ LIQUID HANDLED

Tabel 1

LIQUID	Gasket	Gland Packing	Mechanical Seal Material	Mechanical Seal Water Activation Method	Specific Gravity	Density	Temperature
A							
Acetaldehyde	T	C	1	S		O	
Acetic acid	T	C	1	S	O	O	O
Acetic anhydride	T	C	1	S	O		O
Acetone	T	C	1	S			
Acetonitrile	F	D	1	S			O
Acrylic Acid	F	D	1	S	O		O
Acrylonitrile	T	C	1	S			
Alcoholic drinks	F	C	1	S			
Allyl acetate	T	D	1	S			
Allyl acetone	T	C	1	S			
Allyl alcohol	F	C	1	S			
Allyl chloride	F	C	1	S			
Ammonium carbonate	F	D	2	S+Q		O	O
Ammonium Bicarbonate	F	C	2	S+Q	O	O	O
Amyl acetate	T	C	1	S		O	
Amyl Alcohol	F	C	1	S		O	
Amyl chloride	T	D	1	S			O
Amyl ether	F	C	1	S			
Aqueous ammonia	F	C	2	S		O	O
B							
Barium chloride	F	C	2	S+Q	O	O	O
Benzaldehyde	T	C	1	S	O		
Benzene	T	C	1	S			
Benzene	F	C	2	S			
Benzyl Acetate	T	D	1	S	O		
Boric acid	F	C	2	S+Q	O	O	O
Boric acid	F	C	1	S			
Brake Oil	T	D	1	S			O
Butyl Acetate	F	D	1	S	O		
Butyl acetate diamyl	T	D	1	S	O		
Butyl acetate dibutyl	F	D	1	S	O		
Butyl acetate diethyl	F	C	1	S			
Butyl Alcohol	C	C	1	S			
Butyl Ether	T	C	1	S		O	
Butyric acid	T	D	1	S		O	
Butyric ethyl	T	D	1	S			
Butyric methyl							
C							
Calcium carbonate	F	C	2	S+Q	O	O	
Calcium hidroxide	F	C	2	S+Q	O	O	
Carbolic acid	T	D	2	S+Q	O		O
Carbonate water	F	C	1	S			
Caustic soda	F	D	2	S+Q		O	O
Cellosolve	T	D	1	S			
Cellulose acetate	T	D	1	S	O		O
Chrolobenzene	T	C	1	S	O		
Chrome alum	F	D	2	S+Q	O	O	O
Citric acid	F	C	2	S+Q	O	O	O
Coconut oil	F	C	1	S+Q			
Coffee extract	F	C	1	S			
Copper nitrate	F	D	2	S+Q	O	O	O
Corn oil	F	C	1	S			
Creosote	F	D	1	S	O		
Cresol	F	D	1	S+Q	O		
Cyclohexane	F	C	1	S			O
D							
Diacentone alcohol	T	C	1	S			
Dichlorobenzene	F	C	1	S	O		O
Dicloropentane	F	D	1	S	O		
Diethyl benzene	F	C	1	S			O
Diethylene glycol	F	C	1	S	O	O	
Dioxane	T	D	1	S	O		O
Drain	F	C	2	S			
Dyeing solut ion	F	D	2	S			O

LIQUID	Gasket	Gland Packing	Mechanical Seal Material	Mechanical Seal Water Activation Method	Specific Gravity	Density	Temperature
E							
Emulsified oil	F	C	2	S			
Ethyl acetate	T	C	1	S		O	O
Ethyl acrylate	T	D	1	S			
Ethyl alcohol	F	C	1	S			
Ethyl Benzene	F	C	1	S			
Ethyl chloride	F	D	2	S	O		
Ethyl glycol	F	C	1	S	O		
Ethyl pirydine	T	D	1	S			
F							
Ferric nitrate	F	D	2	S+Q	O	O	O
Formaline	F	C	1	S	O		
Fruit juice	F	C	1	S			
Fruit oil	F	C	1	S			
Fuel oil	F	C	1	S			
Furfural	T	C	1	S	O		
G							
Gas oil	F	C	1	S			
Gasoline	F	C	1	S			
Glycerine	F	C	1	S	O	O	O
H							
Heavy oil	F	C	1	S			
Heptane	F	C	1	S			
Hexane	F	C	2	S			
Hexyl alcohol	F	C	1	S			
Hydraulic fluids	F	C	1	S			
I							
Ink	T	D	1	S			O
Isoamil alcohol	F	C	1	S			
Isobutil alcohol	F	C	1	S			O
Isobutil-metil ketone	F	D	1	S			
Isooktane	F	D	1	S			O
Isopropyl alcohol	F	C	1	S			O
Isopropyl benzene	T	D	1	S			
J							
Juice	F	C	1				
K							
Kerosene	F	C	1				
L							
Lactic acid	F	C	2	S	O		O
Linseed oil	F	C	1	S			
Lubricating oil	F	C	1	S			
M							
Magnesium hydroxide	F	C	2	S+Q		O	O
Methyl acrylate	T	D	1	S			
Methyl alcohol	F	C	2	S			
Methyl cloride	F	D	2	S+Q			
Methyl chloroform	F	C	1	S	O		O
Methyl ethyl ketone	T	D	1	S			O
Methyl isobutyl ketone	T	D	1	S			
Milk	F	C	1	S			
Mineral oil	F	C	1	S			
Mineral spirits	F	C	1	S			
Monoethylene glicole	F	C	1	S			
Mustard oil	F	C	1	S			
N							
Naptha	F	C	1	S			
Naptha solvent	F	C	1	S			
Natrium carbonat	F	C	2	S+Q	O	O	O
Natrium discarbonate	F	C	2	S+Q	O	O	O
Nonyl Phenol	F	D	1	S			

LIQUID	Gasket	Gland Packing	Mechanical Seal Material	Mechanical Seal Water Activation Method	Specific Gravity	Density	Temperature
O							
Octane	F	D	1	S			
Oxtanol	F	C	1	S			
Oleic acid	F	C	1	S		O	O
P							
Paraffine wax	F	C	2	S			
Parrila oil	F	C	1	S			
Petroleum	F	C	1	S			
Petroleum benzine	F	C	1	S			
Pinene	F	D	1	S			
Potassium bromide	F	D	2	S+Q	O	O	O
Potassium carbonate	F	D	2	S+Q	O	O	
Potassium chloride	F	C	2	S+Q	O	O	
Potassium dischromate	F	C	2	S+Q	O	O	
Potassium iodide	F	D	2	S+Q	O	O	
Potassium nitrate	F	C	2	S+Q	O	O	
Propyl acctate	T	D	1	S			
Propylene	F	C	1	S	O		
R							
Rapeseed oil	F	C	1	S			
Refrigeration oil	F	C	1	S			
S							
Salad oil	F	C	1	S			
Sea water	F	C	1	S			
Soapsuds	F	C	2	S+Q			O
Soda bromide	F	D	2	S+Q	O	O	O
Soda nitrate	F	C	2	S+Q	O	O	O
Soda sulfate	F	D	2	S+Q	O	O	O
Sodium silicate	F	C	2	S+Q			
Solar oil	F	D	1	S			
Solar oil	F	C	1	S			
Soya been oil	F	C	1	S			
Soya sauce	F	C	1	S			
Stylene	F	D	1	S			
Sugar liquid	F	C	1	S			
Sunflower oil	F	D	1	S			
T							
Tannic acid	F	D	2	S+Q		O	O
Thiophenol	F	D	1	S	O		
Trichloroethylene	F	C	1	S	O		O
Triole	T	C	1	S			O
Turpentine oil	F	C	1	S			
U							
Urea	F	D	2	S+Q	O	O	
V							
Vegetable oil							
W							
Whale oil							
Whisky							
Wine							
X							
Xylene	F	C	1	S			

Gasket material : F ; Fluororubber (Viton)
T ; Teflon (PTFE)

Gland packing material : C ; Carbonized fiber
D ; Teflon

Mechanical seal material : 1 : Cermin/carbon
2 : SiC/SiC

Water activation (mechanical seal) :
S : Self injection
S+Q : Self-injection + Quenching or external injection

Specific gravityO; Check the value
Density O; Check the value
Temperature O; Check the value

Note : The above chart is a general guide. Liquid have been listed according to the commonly used classification, but corrosian resistence will vary considen ably according to the nature of the liquid (temperature, density and purity) and the circumstances under which used.

■ SECTIONAL VIEW

Packing Type (Standard)

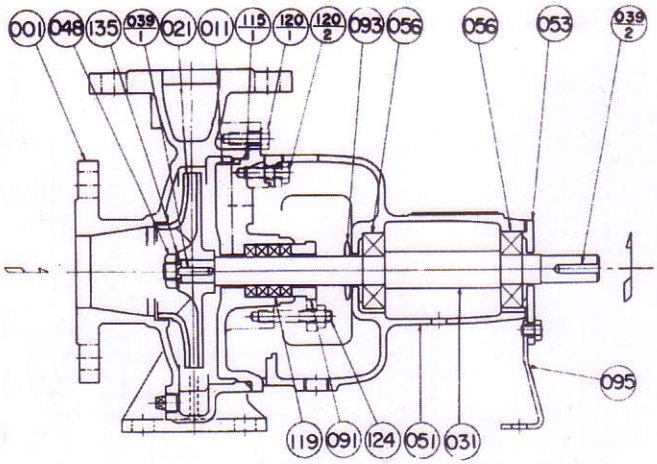

Mechanical seal type (Optional)

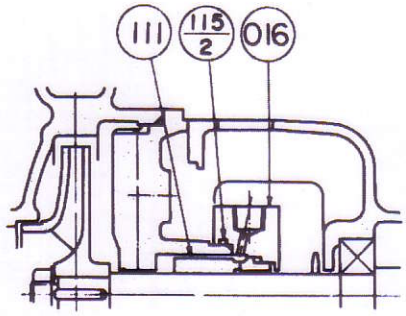

Packing type (Standard)

PART NO.	PART NAME	MATERIAL	Q'TY/ UNIT
091	GLAND	316 STAINLESS STEEL	1
119	GLAND PACKING	TEFLON (PTFE)	4
124	GLAND BOLT	316 STAINLESS STEEL	2

Mechanical seal type (Optional)

PART NO.	PART NAME	MATERIAL	Q'TY/ UNIT
016	MECH. SEAL COVER	316 STAINLESS STEEL	1
111	MECH. SEAL	SiC/SiC	1
115-2	"O" RING	FLUORORUBBER (VITON)	1

PART NO.	PART NAME	MATERIAL	Q'TY/ UNIT
001	CASING	SCS14, STAINLESS STEEL CASTING	1
011	CASING COVER	SCS14, STAINLESS STEEL CASTING	1
021	IMPELLER	SCS14, STAINLESS STEEL CASTING	1
031	SHAFT	316 STAINLESS STEEL	1
039-1	KEY	316 STAINLESS STEEL	1
039-2	KEY	Carbon Steel	1
048	IMPELLER NUT	316 STAINLESS STEEL	1
051	BEARING HOUSING	CAST IRON	1
053	BEARING COVER	CAST IRON	1
056	BALL BEARING	-	2
093	DEFLECTOR	RUBBER (EPDM)	1
095	BEARING SUPPORT	STEEL	1
115-1	O-Ring	FLUORORUBBER (VITON)	1
120-1	BOLT, CASING	304 STAINLESS STEEL	1 SET
120-2	BOLT, B.HOUSING	STEEL	4
135	IMP. WASHER	304 STAINLESS STEEL	1

■ DIMENSIONS

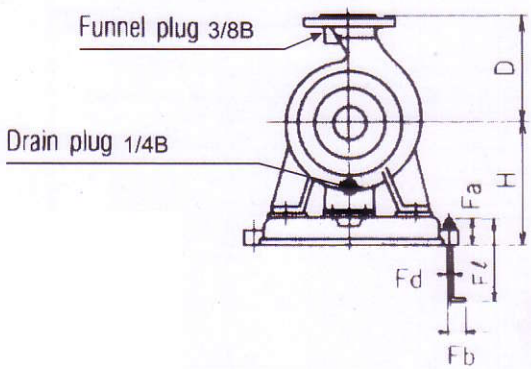

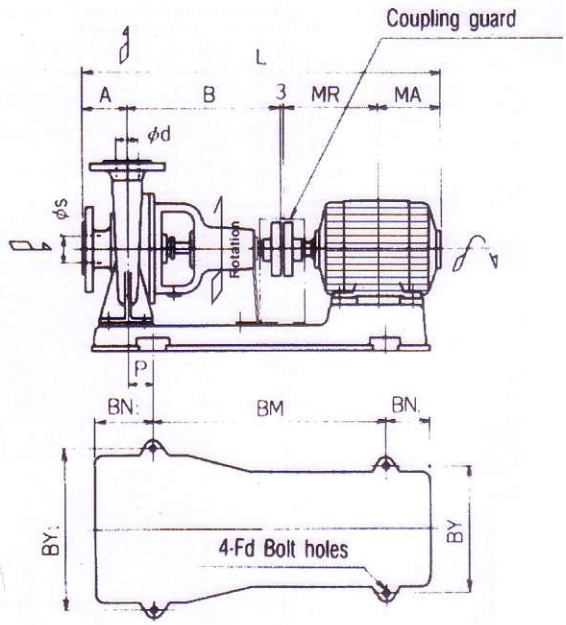

All specifications are subject to change without notice

EBARA CORPORATION

Head Office, Tokyo	Phone : 81 - 3 - 3743 - 6111	
International Division, Tokyo	Phone : 81 - 3 - 5461 - 6111	
Singapore Office	Phone : 65 - 862 - 3536	Fax : 65 - 861 - 0589
Beijing Office	Phone : 86 - 10 - 6590 - 8150	Fax : 86 - 10 - 6590 - 8158
Bangkok Office	Phone : 66 - 2 - 216 - 4935	Fax : 66 - 2 - 216 - 4937
Hanoi Office	Phone : 84 - 4 - 826 - 3601	Fax : 84 - 4 - 826 - 3617
Jakarta Office	Phone : 62 - 21 - 8740852	Fax : 62 - 21 - 8740033
Kuala Lumpur Office	Phone : 603 - 5569 - 1655	Fax : 603 - 5569 - 3766
Manila Office	Phone : 63 - 2 - 816 - 7524	Fax : 63 - 2 - 817 - 6662
Taipei Office	Phone : 886 - 2- 567 - 1310	Fax : 886 - 2- 567 - 1046
Dubai Office	Phone : 971 - 4 - 883 - 8889	Fax : 971 - 4 - 883 - 5307

Distributor / Dealer